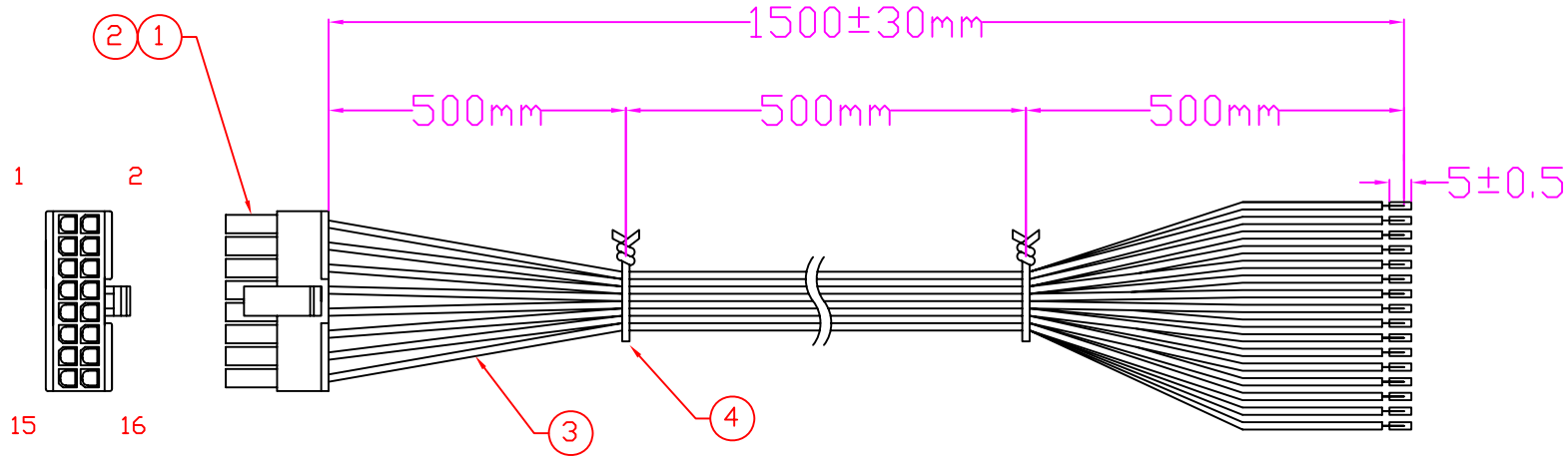

WIRING DIAGRAM

Descriotion	COLOR	2*8P HOUSING	Descriotion	COLOR	2*8P HOUSING	NOTE	DESCRIPTION
1-16	Black	(24AWG)				1	P/N:CKM30010101-2*8P , 3.0mm 2*8P HOUSING
						2	P/N:CKM30010101-T , 3.0mm TERMINAL * 16PCS
						3	UL 1007 24AWG * 12PCS CABLE
						4	cable tie * 2PCS

PART NUMBER

CTP – 900400 – 1 5 0 0 – 0 6 0

SERIES

WIRE LENGTH: 1500mm

REV.	DATE	DESCRIPTION
A	0224,2012	RELEASE

Connect-Tech Products Corp.

TEL:+1 510 4400578 www.Connect-Tech-Products.com

TOLERANCES	TITLE	CABLE SERIES, WIRE HARENESS HOUSING 3.0mm PITCH 2X8P to opened		
X.X ±0.3 X.XX ±0.2 X.XXX±0.1 Angle ±5°	DRAWED BY	CHECKED BY	APPROVED BY	
	LION	F.Y.H	OMAR	

UNIT	SCALE	SIZE	DRAW NO.	REV.
MM	NONE	A4	D090-04060	A