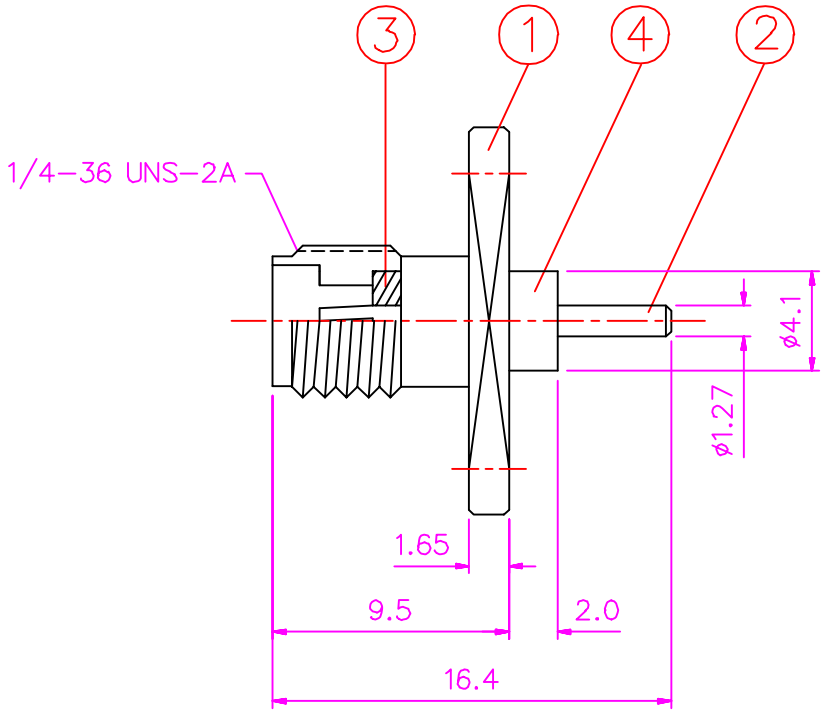

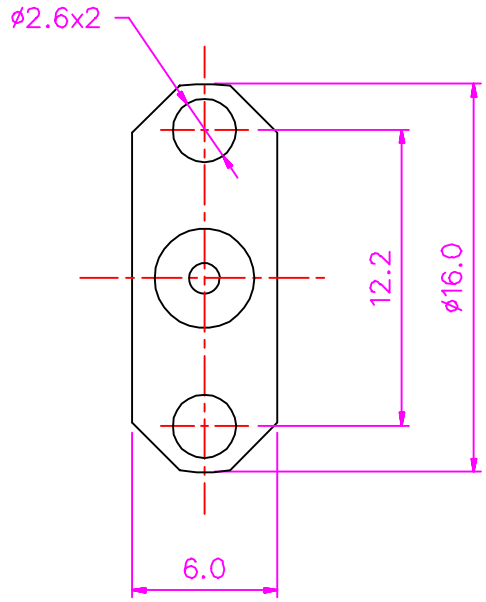

PART NUMBER

CTP – 53AK – 6 S – 1 5 7 – 0 1 9

- 53AK: SERIES
- 6: 30u" PLATED ON CONTACT
- S: STAINLESS STEEL ON BODY
- 1: FEMALE
- 5: 50 OHM
- 7: SOLDER

ELECTRICAL PERFORMANCE:

IMPEDANCE: 50 OHMS
FREQUENCY: DC–18.0GHz
WORKING VOLTAGE: 500Vrms MAX.
DIELECTRIC WITHSTANDING VOLTAGE: 1000Vrms MAX.
INSULATOR RESISTANCE: 5000 MEGOHMS MIN.

NO.	DESCRIPTION	MATERIALS	FINISHED
1	BODY	SUS303	Passivated
2	CONTACT	Be. Copper	Gold 30 μ
3	INSULATOR	TEFLON	
4	INSULATOR	TEFLON	

REV.	DATE	DESCRIPTION
A	0824,2009	RELEASE

Connect-Tech Products Corp.
TEL:+1 510 4400578 www.Connect–Tech–Products.com

TOLERANCES	TITLE		
X.X ±0.2 X.XX ±0.15 X.XXX ±0.1 Angle ±5°	SMA SERIES FEMALE PANEL 2 HOLES EXPOSED TEFLON BLUNT POST		
	DRAWED BY	CHECKED BY	APPROVED BY
	LION	F.Y.H	OMAR

UNIT	SCALE	SIZE	DRAW NO.	REV.
MM	NONE	A4	D053–AK019	A

05002