Material:Pin:Brass Tin-Plated
Base:PBT+30%G/F UL94-V0,Black
Circuits:2-12
Contact Resistance:10mΩMax
Insulation Resistance:1000MΩ Min
Withstanding Voltage:1500V AC/minute
Current Rating:5A AC,DC
Voltage Rating:250V AC,DC
Temperature Range:-25℃~+85℃

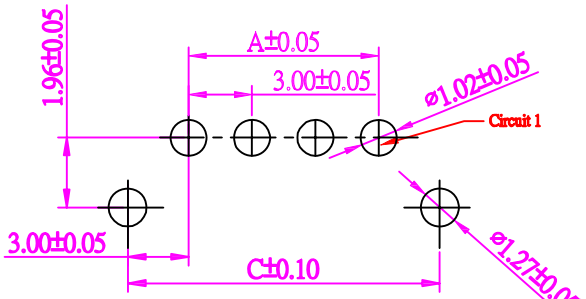

P.C.B. LAYOUT

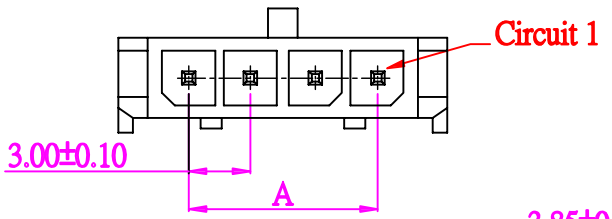

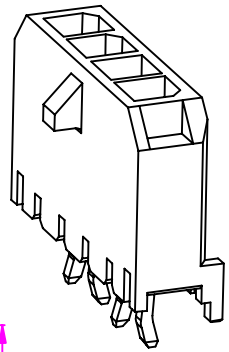

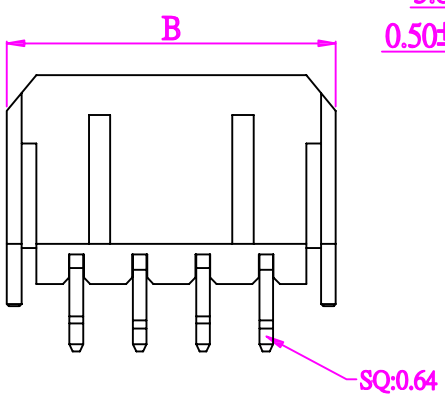

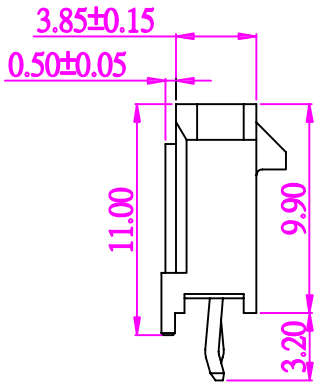

PART NUMBER

CTP – 13KB – X X T 0 – 0 1 2

SERIES

NUMBER OF POS.
(01~12 POS.)

TIN PLATED ON CONTACT

Dimensions

circuit	A	B
1*1	– –	6.65
1*2	3.00	9.65
1*3	6.00	12.65
1*4	9.00	15.65
1*5	12.00	18.65
1*6	15.00	21.65

circuit	A	B
1*7	18.00	24.65
1*8	21.00	27.65
1*9	24.00	30.65
1*10	27.00	33.65
1*11	30.00	36.65
1*12	33.00	39.65

Connect-Tech Products Corp.
TEL:+1 510 4400578 www.Connect-Tech-Products.com

TOLERANCES	TITLE	WAFER SERIES 3.00mm PITCH, MICRO FIT, DIP STRAIGHT ROW, VERTICAL		
X.X ±0.3 X.XX ±0.2 X.XXX±0.1 Angle ±5°	DRAWED BY	CHECKED BY	APPROVED BY	
	SION	T.Y.H	OMAR	
17001	UNIT	SCALE	SIZE	DRAW NO. / REV.
	MM	NONE	A4	D013-KB012 / A

REV.	DATE	DESCRIPTION
A	0527,2010	RELEASE