CTPE-114

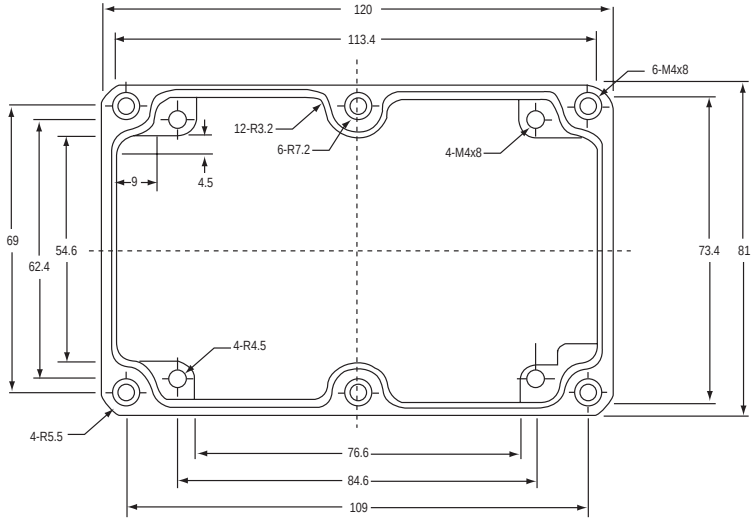

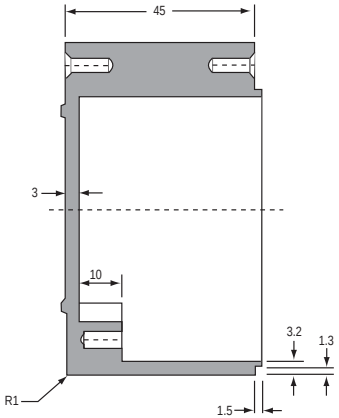

CTPE-114 TOP

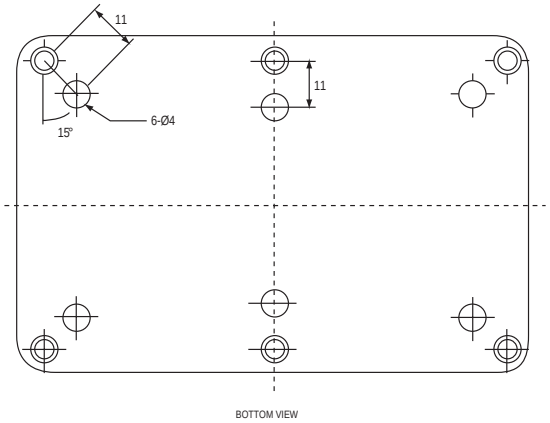

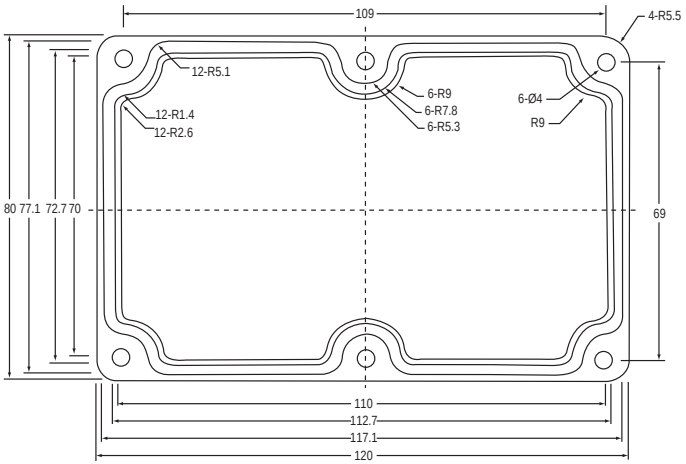

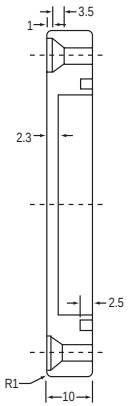

Phone 1-800-809-2751 Fax 1-510-440-0579

www.connect-tech-products.com • info@connect-tech-products.com

4428 Technology Drive • Fremont, CA 94538, USA • 510-498-8815 • Fax: 510-440-0579