CTP-SMA-106-RP

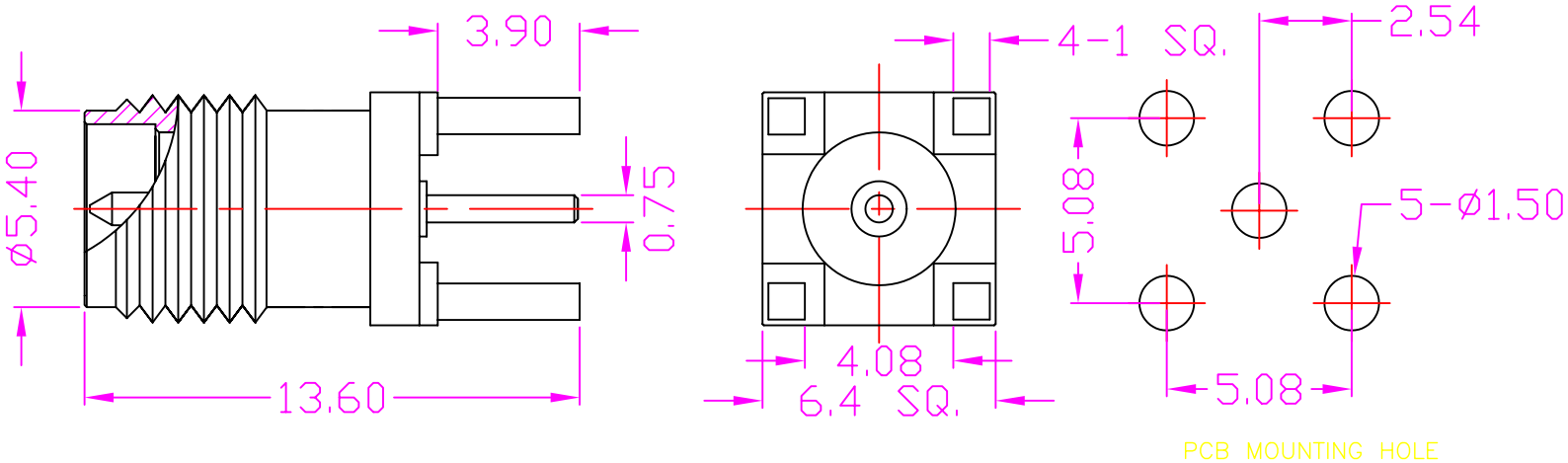

MATERIALS

1. INSULATOR : TEFLON UL94V-0, WHITE
2. BODY : BRASS, GOLD PLATED
3. CONTACT : BRASS, GOLD PLATED

OTHER INFORMATION

1. CONTACT RESISTANCE : 6.0m OHMS MAX.
2. DIELECTRIC WITHSTANDING VOLTAGE : 500V AC RMS FOR 1 MINUTE
3. INSULATION RESISTANCE : 5000M OHMS MIN. AT 500V DC
4. OPERATING TEMPERATURE : −65°C ~ +165°C

Phone 1-800-809-2751 Fax 1-510-440-0579
www.connect-tech-products.com • info@connect-tech-products.com
4428 Technology Drive • Fremont, CA 94538, USA • 510-498-8815 • Fax: 510-440-0579