CTP-P-1020-14

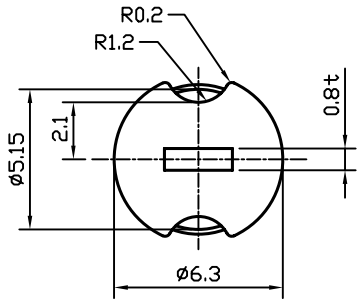

1.ø2.0 Test Engagmement Force 2.0kg MAX.
Separation 0.1kg MIN.
2.Contact Resistance (Between jack and plug): 30mΩ MAX.
3.Insulation Resistance 100MΩ MIN. at 500V DC
4.Insulation Withstand Voltage 500Vrms for 1 minute

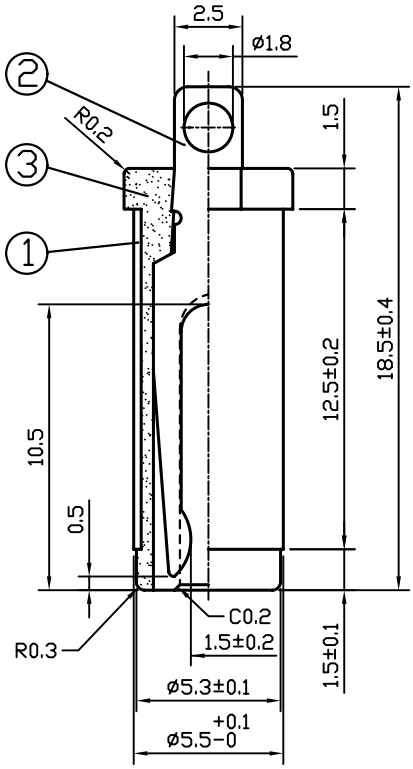

DIMENSIONS RANGE	TOLERANGE UNLESS SPECIFIED
0.5≤X<1	±0.1
1≤X≤6	±0.15
6<X≤18	±0.2
18<X≤50	±0.3

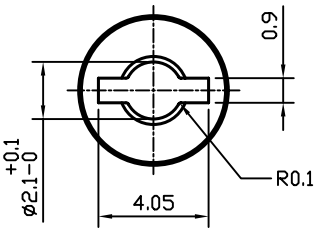

Phone 1-800-809-2751 Fax 1-510-440-0579
www.connect-tech-products.com • info@connect-tech-products.com
4428 Technology Drive • Fremont, CA 94538, USA • 510-498-8815 • Fax: 510-440-0579